> NK SERIES

超精密氣壓夾頭

SUPER PRECISION AIR CHUCKS



- ◎ 夾持工件的同軸度及重復夾持精度可達u級,簡化操作,實現高效率精密加工。
- ◎ 氣缸與夾盤直連,確保夾持穩定,減少外部管路幹擾。
- ◎ 設有定位銷,生爪重復拆裝時仍保保持良好定位精度,減少換裝誤差
- ◎ The clamping accuracy of coaxiality and repeatability can reach the micron (um) level, easy operations and highly efficiency for precision machining.
- ◎ The pneumatic cylinder is directly connected to the chuck, ensuring stable clamping and minimizing interference from external pipe connection.
- ◎ Equipped with positioning pins, the system maintains high positioning accuracy even after repeated removal and reinstallation of the soft jaws, thereby reducing setup errors.

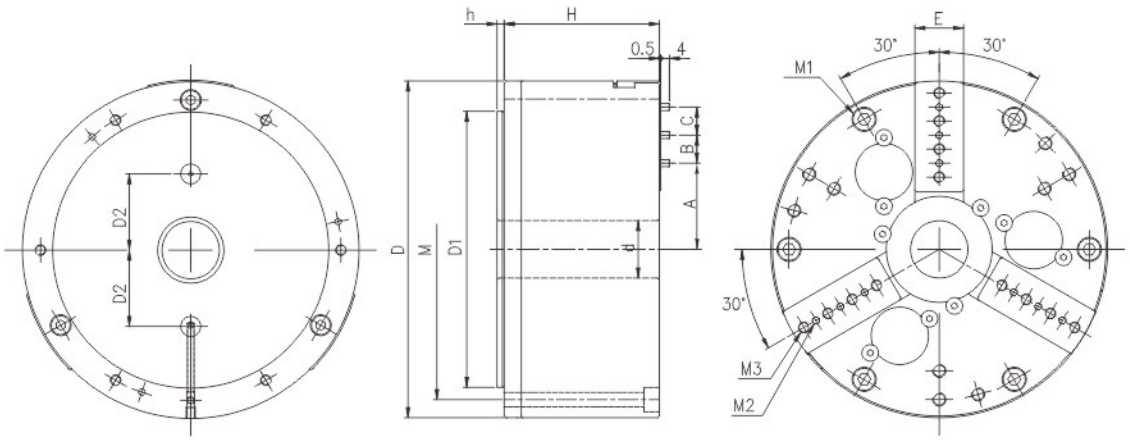

規格 Spec 型號 Model	爪行程(直徑) Jaw Stroke (Dia.)(mm)	直徑夾持範圍 Clamping Range Dia. (mm)	最大夾持力 Max clamping Force KN(kgf)	最高轉速 Max RPM	重量 Weight (Kg)	最高氣壓 Max air pressure	A max	A min
NK-06	3	3-150	1200(11.7)	4200	9.8	1Mpa	41.25	38.25
NK-08	3	5-200	1800(17.6)	2500	26.3	1Mpa	67.25	64.25

規格 Spec 型號 Model	B	C	D	d	D1	D2	H	h	E	M	M1	M2	M3
NK-06	12.7	12.7	152.4	26	124.97	34.5	70.3	3.2	22	135.89	6-M6	9-Φ3.18	12-M5
NK-08	25.4	-	203.2	50	167.64	50	99.5	7	25	182.88	6-M10	6-Φ6.36	6-M10

※ 保留技術更改的權利，恕不另行通知 Subject to technology changes without prior information
※ 非標需求可訂做 Non-standard requirements can be made

